DocuSign Envelope ID: 683A808E-0B0B-4CC7-833E-E2247A5302C8

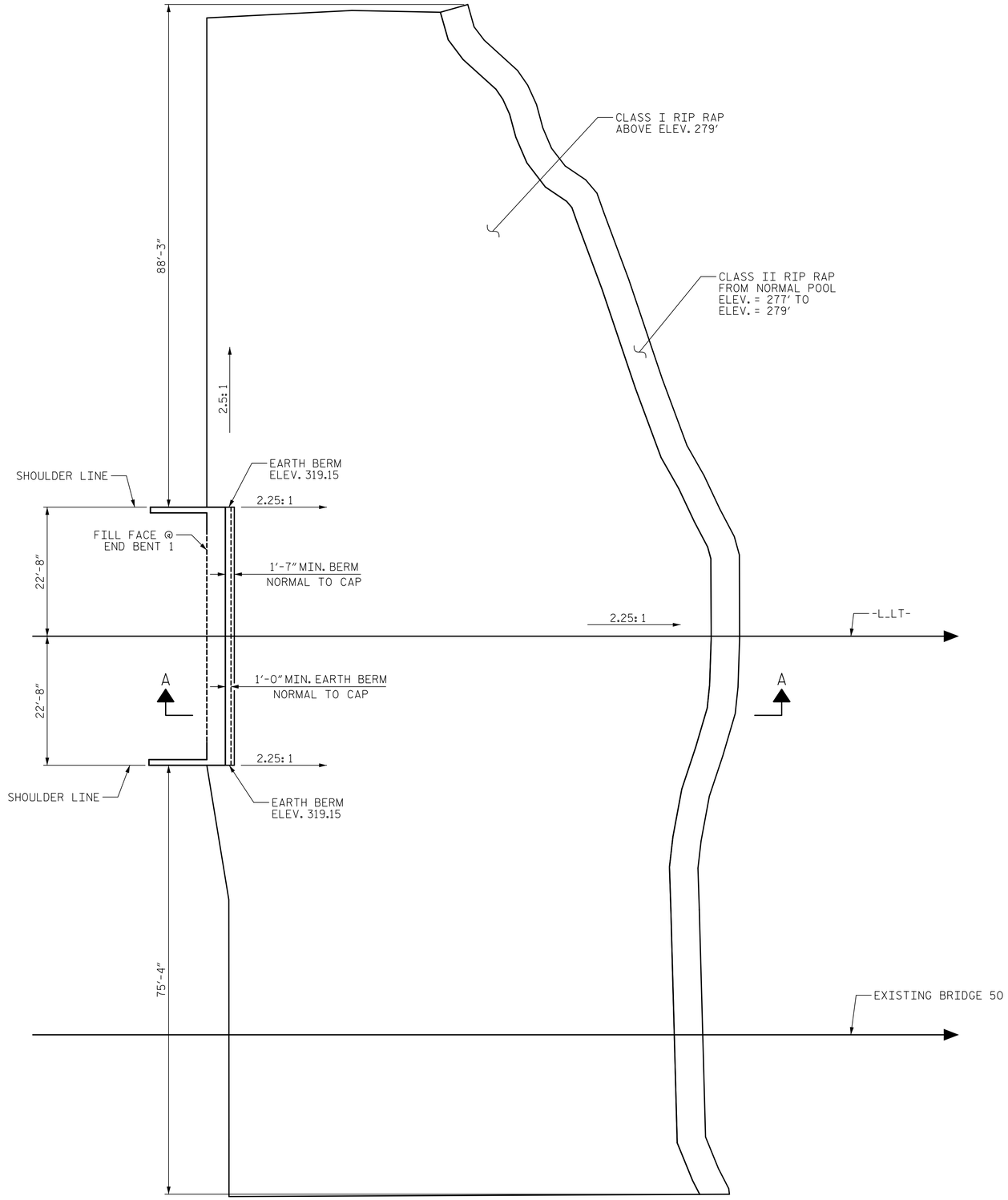

PLAN OF RIP RAP

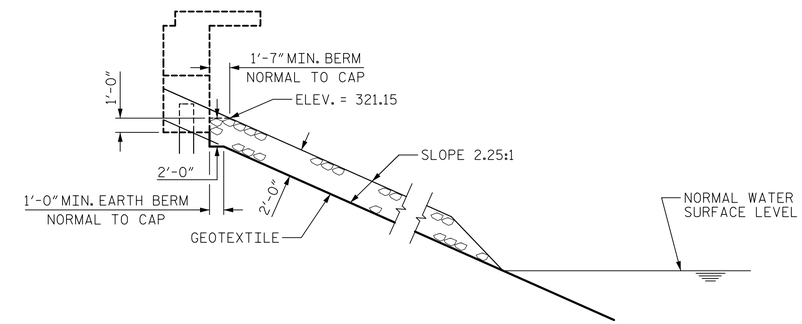

SECTION A-A

ESTIMATED QUANTITIES			
BRIDGE @ STA. 339+86.39 -L-	RIP RAP CLASS I (2'-0" THICK)	RIP RAP CLASS II (2'-0" THICK)	GEOTEXTILE FOR DRAINAGE
	TONS	TONS	SQUARE YARDS
END BENT 1	1688	122	2010
END BENT 2	1491	98	1770

PROJECT NO. B-4974

STANLY/MONTGOMERY COUNTY

STATION: 339+86.39 -L-

SHEET 1 OF 2

DRAWN BY : H. ROSEMOND	DATE : 4/2018		
CHECKED BY : M. TOM	DATE : 4/2018		
DESIGNED BY : H. ROSEMOND	DATE : 4/2018		
DESIGN CHECKED BY : M. TOM	DATE : 4/2018		

DOCUMENT NOT CONSIDERED FINAL UNLESS ALL SIGNATURES COMPLETED

AECOM

AECOM TECHNICAL SERVICES, INC.
701 CORPORATE CENTER DRIVE, SUITE 475
RALEIGH, NC 27607
(919) 854-6200 www.aecom.com
AECOM License No. F-0342

NORTH CAROLINA PROFESSIONAL SEAL 035062 ENGINEER JOHN E. SLOAN III
Docu Signed by:
8/30/2018

STATE OF NORTH CAROLINA
DEPARTMENT OF TRANSPORTATION
RALEIGH

RIP RAP DETAILS

REVISIONS							
NO.	BY:	DATE:	NO.	BY:	DATE:		
1			3				
2			4				

SHEET NO. S-94

TOTAL SHEETS 148

USER: mdtTom
DGN: \\USRAL3\p00\ouaecomnet.com\Data\Projects\60536253\600_Work\910_CADD\0_NCDOT_TIP\Structures\04 Drawings\40_B9_B4974_SMU_RRdgn

DATE: 8/28/2018
TIME: 2:42:41 PM